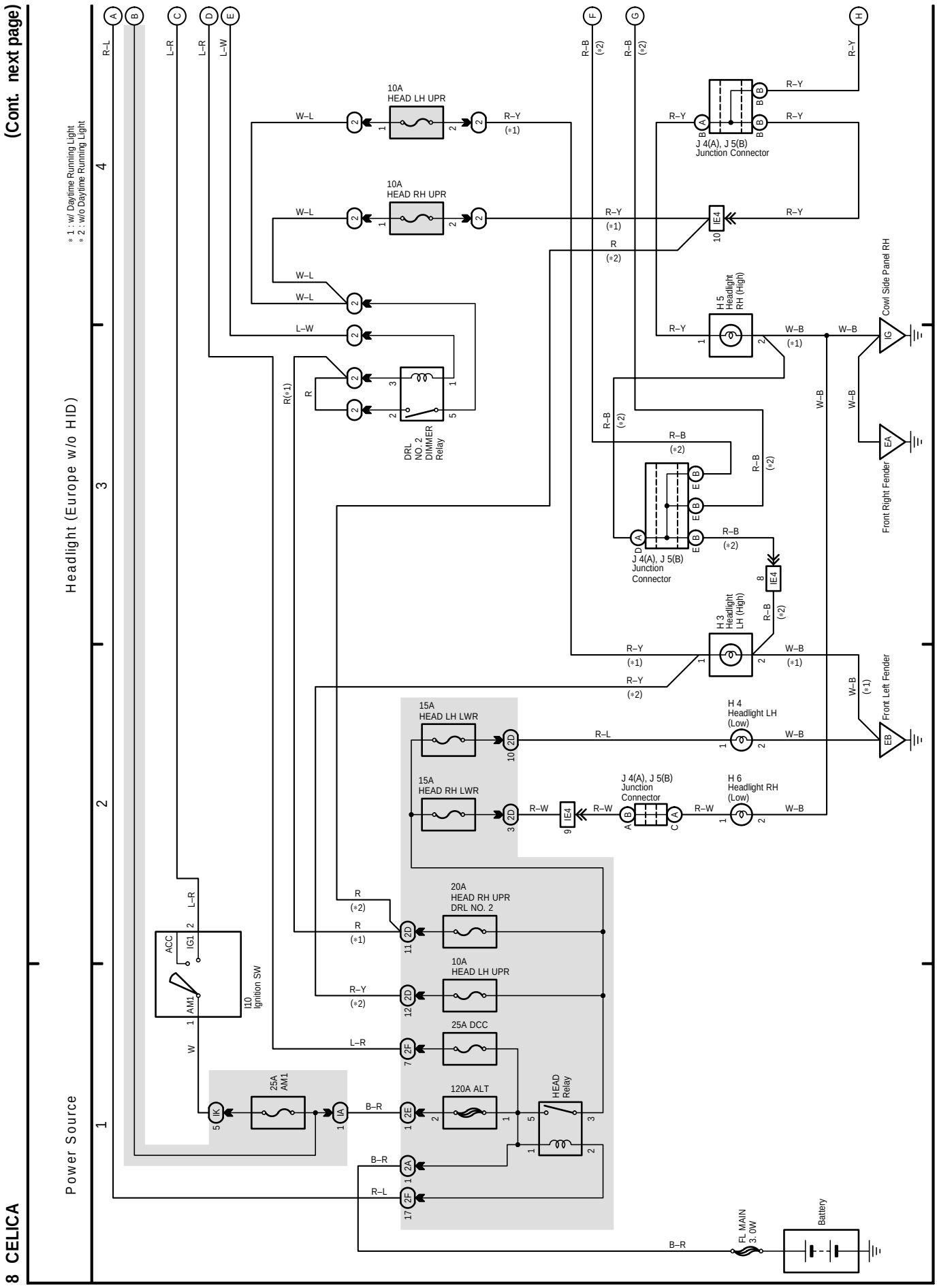
(Cont. next page)
Headlight (Europe w/o HID)
Power Source
* 1 : w/ Daytime Running Light
* 2 : w/o Daytime Running Light
10A HEAD LH UPR
10A HEAD RH UPR
DRL NO. 2 DIMMER Relay
J 4(A), J 5(B) Junction Connector
H 5 Headlight RH (High)
H 3 Headlight LH (High)
H 4 Headlight LH (Low)
H 6 Headlight RH (Low)
15A HEAD LH LWR
15A HEAD RH LWR
20A HEAD RH UPR DRL NO. 2
10A HEAD LH UPR
25A DCC
120A ALT
HEAD Relay
25A AM1
I10 Ignition SW
ACC
IG1
AM1
FL MAIN 3.0W
Battery
Cowl Side Panel RH
Front Right Fender
Front Left Fender
IG
EA
EB
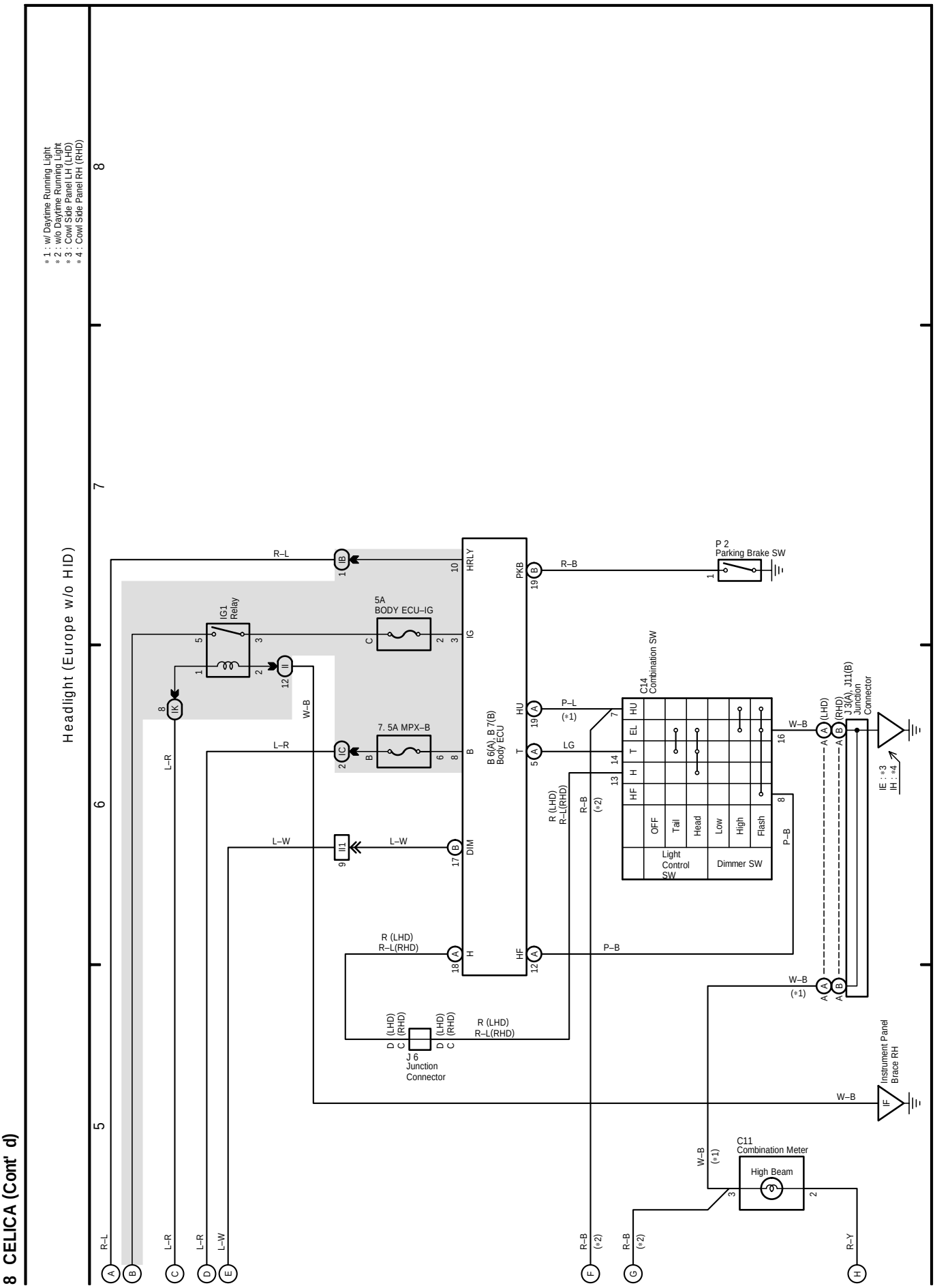
8 CELICA (Cont' d)